SPACE PRODUCTS:
Synthetized and processed Space System data used for operations.

SPACE SERVICES:
Services provided by Space Systems to users in order to enable them to conduct operations.

THE KEY ROLE OF

SPACE SUPPORT

IN NATO OPERATIONS

From left: NOBLE JUMP 2015, photograph by Evert-Jan Daniels (MCD). SEA SHIELD 2017, photograph by HQ MARCOM. NASAMS II during exercise JOINT VIKING 2017, photograph by Kristian Berg. The launching of a surveillance drone during NATO UNIFIED VISION 2014 trial, photograph by NATO.

SPACE CAPABILITIES

SYNTHETIC APERTURE RADAR SATELLITES

ON THE COVER

by **FLAVIO GIUDICE**
Aerospace Engineer
J3 Space Operations
HQ SHAPE

LT COL JOHN PATRICK
United States Air Force
J3 Space Operations
HQ SHAPE

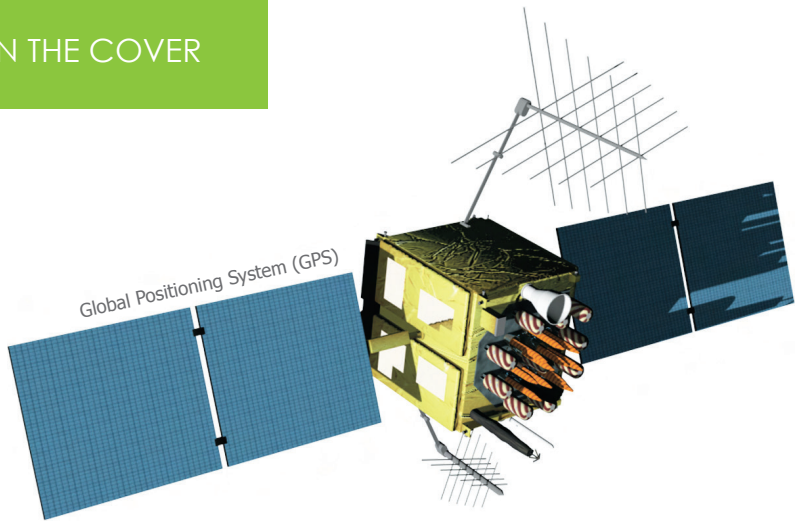

WITH NEARLY 12,000 TRACKABLE OBJECTS and 1,300 satellites orbiting the Earth, the Space domain is highly "congested, competitive, and contested".[1] Over 80 countries and organisations operate Space Systems, which provide a host of services to billions of people. Space Systems and their related technologies are now an integral part of the global critical infrastructure and continue to grow exponentially.

SPACE SYSTEMS ARE no longer exclusively used for military purposes. It is fair to say that civilian exploitation of Space surpasses military use. Therefore, it is no surprise that Space systems continue to expand into a range of activities, including communications, navigation, surveillance, environmental monitoring, and early warning, to name but a few. However, since the end of the Cold War, risks to Space systems continue to increase and these risks are no longer limited to national security. Today, a disruption in services provided by Space systems will affect not only large organisations, but individual citizens as well.

The use of Space capabilities allows NATO to achieve both political and military objectives with increased effectiveness and efficiency, resulting in a decrease of resources required and a reduction of time necessary to achieve the desired end state as outlined by political guidance.

Over the last ten years, NATO has increasingly relied on Space capabilities and products during operations to achieve its mission objectives. NATO dependencies on Space require attention to assure assets and capabilities are available throughout all phases of a campaign or operation, from planning to execution to transition. The absence of Space capabilities and products will inhibit the ability of NATO to achieve overall objectives in the most efficient and effective means possible. The sentence "No single NATO operation without Space" best summarizes the effects that lack of Space capabilities would have on NATO operations. It does not mean that no operation can be conducted without Space capabilities, but that the level of warfare will downgrade to early post-WWII era military employment and tactics. Given the key role of Space in NATO operations, the NATO Bi-Strategic Command Space Working Group (Bi-SCSWG) was formally established in September 2012. Led by the Strategic Commands, the Bi-SCSWG was tasked[2] by the NATO Military Committee to increase Collaborative Space Support to NATO Operations by studying operational requirements and improving Space training and education.

Soldiers operate a tethered aerostat, in order to provide persistent ground surveillance. Photo by NATO

The following principles or fundamental considerations are intended to provide a baseline to understand the complexity of Space in NATO:

— NATO does not own any Space-based assets or capabilities, though it does lease capabilities from NATO Nations and operate both fixed and deployable ground stations with NATO equipment and personnel.
— Nations agree, on a voluntary basis, to offer Space products[3] and Space services[4] intended to provide the desired effects in support of the mission and its objectives.
— While providing Space support to NATO

BELOW: Distribution of national Space assets

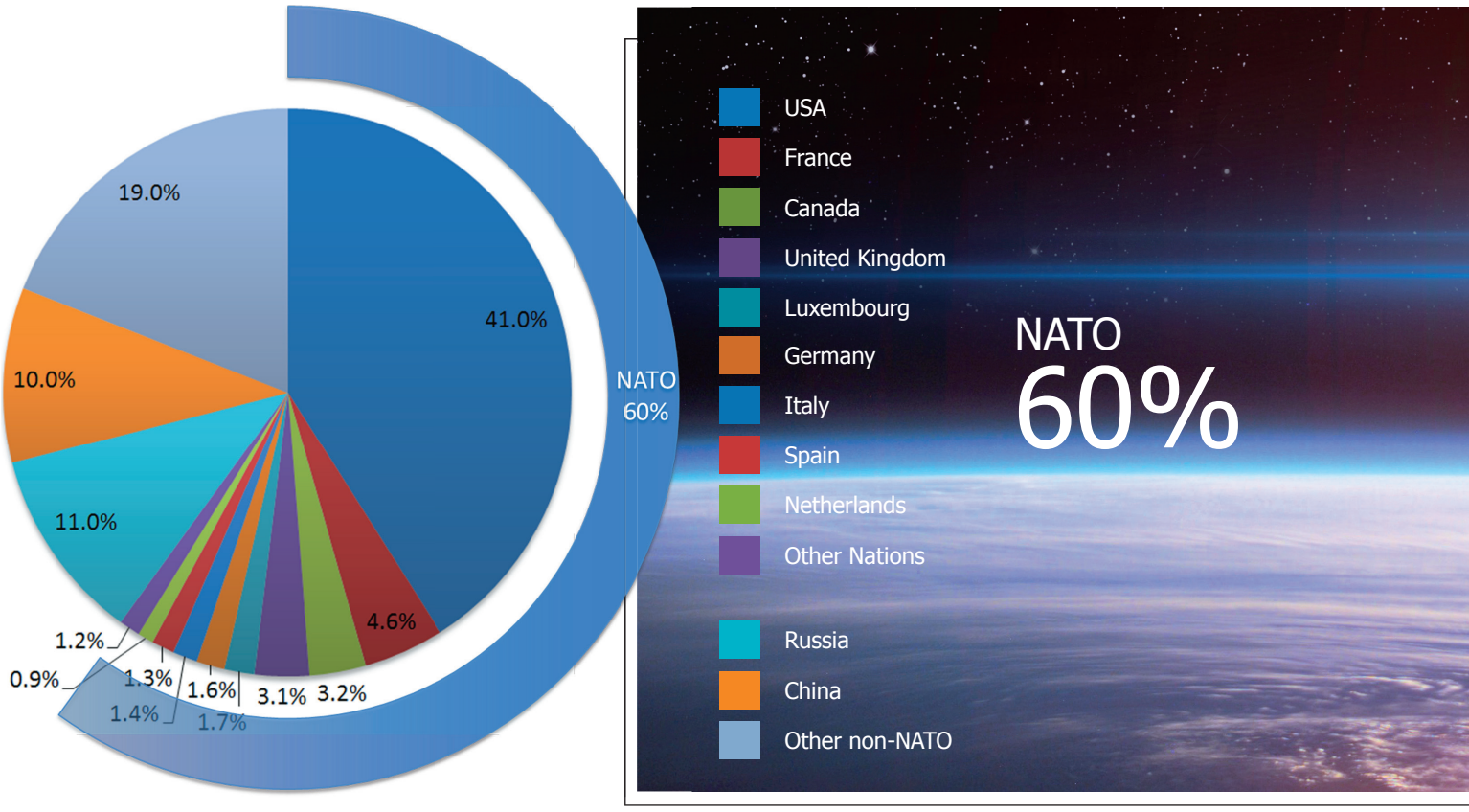

operations, Nations retain Command and Control (C2) over their assets. NATO can request products and services by sending a Request for Space Support (RSS) to member countries whose Space capability makes it possible to accomplish the task.

— In the Operations Planning Process (OPP) commanders should grant Space full consideration as a domain that is currently afforded to Air, Land, Maritime and Cyber. Space should be an element of all aspects of the OPP, from development of the comprehensive picture of the operational environment to the centre of gravity analysis.

— National Space products and services expand the effectiveness of NATO operations, and thus adversaries will continue to actively seek to deny NATO's access to Space while at the same time using their counter-Space and Space assets and capabilities to achieve their objectives against the Alliance.

— All NATO operational domains are greatly reliant on Space capabilities for their activities.

NATO NATIONS OWN 60% of the currently operational satellites in orbit. USA represents approximately 70% of NATO "Space Force". NATO operations depend on Space-capable member countries to provide Space capabilities. These include, but are not limited to: Satellite Communications (SATCOM), Positioning, Navigation, and Timing (PNT), Intelligence, Surveillance, and Reconnaissance (ISR), Terrestrial and Space Environmental Monitoring (METOC), Space Situational Awareness (SSA) and Shared Early Warning (SEW).

1 Satellite Communications (SATCOM)

SATCOM provides global coverage and critical connectivity, which allow the Alliance to maintain strategic situational awareness and to convey its intent for tactical manoeuvre of forces whose rapid movement and wide area deployments require Beyond Line of Sight (BLOS) communications. For these reasons, SATCOM is considered an essential enabler to NATO missions. NATO does not own any SATCOM satellites, but owns and operates both fixed and deployable ground terminals.

NATO Uses and Effects

- Command, Control and Communications (C3) Systems
- Remotely Piloted Aircraft (RPA) operations
- Deployed/BLOS communications

Advantages

- A constellation of three geostationary[5] communication satellites spaced evenly provides near-total Earth coverage between 65 degrees north and south latitude. In general, a mixture of geosynchronous and polar (Low Earth Orbit[6]/Highly Elliptical Orbit[7]) satellites is required for full global coverage. If required, satellites can provide focused capacity in areas of special interest.
- SATCOM systems provide real time BLOS transmission without the need for long terrestrial communications architecture.

Disadvantages

- Limited capacity: Exponential growth of user requirements outpaces the current capabilities of on-station SATCOM systems. This necessitates the Alliance to supplement SATCOM capacity with commercial, inter-

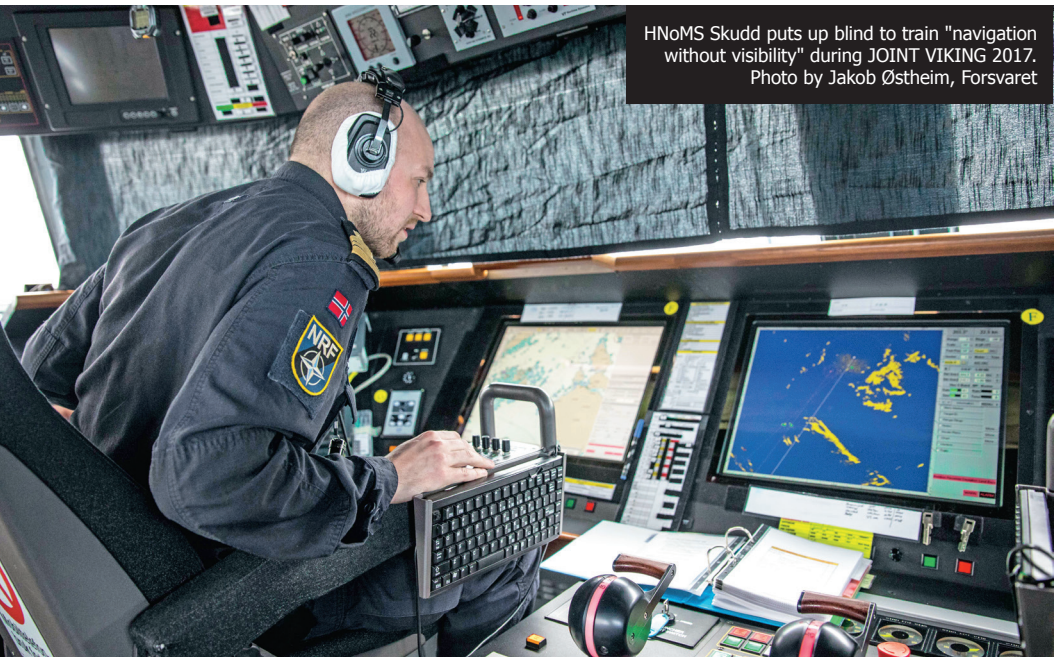

HNoMS Skudd puts up blind to train "navigation without visibility" during JOINT VIKING 2017. Photo by Jakob Østheim, Forsvaret

national, and civil systems.

- Transmission path: Due to the distances travelled on a SATCOM, significant latency is introduced into the communication link.
- Antenna size: NATO commanders often must compromise either information flow rate or mobility. Generically speaking, the bigger is the antenna, the higher can be the information flow, but the less is the mobility.
- Jamming: SATCOM systems are susceptible to jamming; an emission of radio frequency signals intentionally interfering with wireless communications.
- Terrestrial weather: Precipitation not only degrades the signal but, if heavy enough, can cause a complete outage. The higher the frequency, the greater the effect.
- Space weather: Solar activity can disrupt SATCOM for short periods of time or, in extreme cases, can cause communications outages. This mostly affects receivers in the Arctic and equatorial regions.
- Sun conjunctions: Satellite alignment between the Earth and the sun causes communications disruptions and outages.

2 Positioning, Navigation and Timing (PNT)

NATO's use of PNT is pervasive throughout its operations. A Global Navigation Satellite System (GNSS) establishes a "common reference grid" within the operational area, and enables a "common time", thus facilitating synchronization of operations in challenging environments. Space-based PNT systems support strategic, operational, and tactical missions by providing precise three-dimensional location and navigation capability in all four physical domains (Land, Maritime, Air, and Space), as well as a highly accurate time reference, which is fundamental in cyberspace, cryptography and to SATCOM signal acquisition. Signals (L-band: frequency=1-2 GHz) from at least four satellites placed in Medium Earth Orbit[8] are required to build a three-dimensional position and navigation picture, while only one signal is needed for timing.

Today, NATO primarily uses the NavStar Global Positioning System (GPS) signals for PNT. A complementary capability to GPS is the European Galileo System, which has been operating since 2016, and whose full capability will be in place by 2020. The signals on both GPS and Galileo were designed to be interoperable, meaning a receiver could use any combination of both constellations to determine position and timing in order to increase performance in terms of accuracy (up to less than 1 metre) and availability. These two factors can be improved by using ground and Space-based regional systems: USA's Wide Area Augmentation System (WAAS) and European Geostationary Navigation Overlay System (EGNOS) are the two main systems.

NATO Uses and Effects

- Precision strike: The accuracy and precision of fire are improved through GNSS-aided artillery and reduce target location error.
- Force navigation: NATO means (*i.e.* tanks and ships) can precisely plot their position and movements.
- Logistic support: Re-supply efforts, personel recovery, combat search and rescue.
- Network timing.
- Navigation Warfare (NAVWAR): It encompasses various offensive, defensive and support operations to ensure unimpeded availability of PNT information for the Alliance and, when necessary, deny PNT information to an adversary. NAVWAR is a cross-domain (Land, Sea, Air, Space, and Cyberspace) and should be a consideration in all joint planning phases.
- Land and coastlines accurate survey.
- Countering Improvised Explosive Devices (C-IED): Mines can be precisely plotted for efficient retrieval.
- Ballistic missile warning and defeat.
- Cryptographic support (key generation).

Advantages

- Global coverage: The GNSS constellation provides continuous global service.
- Accuracy: Service is provided by the type of receiver used, the number of satellites in view, and the geometric configuration of those satellites.
- Because GNSS equipment is passive, it is capable of providing continuous real-time information to a potentially unlimited number of users. Any user with a receiver has access to the information.
- Graceful degradation: In the event the GPS constellation cannot be updated, accuracy will gradually degrade with time.
- Grid reference: The default navigation grid used by GPS is the WGS-84, which can be easily converted.

Disadvantages

- Adversary: Exploitation of the GNSS can reduce the Alliance military advantage.
- Jamming: GNSS signal is very susceptible to jamming. The stronger the jammer, the larger the affected geographic area.
- Environment: Dense vegetation or steep terrain may diminish GNSS capabilities due to the lack of reception of signals.

Satellite communication station at Joint Warfare Centre during TRIDENT JAGUAR 2014. Photo by JWC PAO

- GNSS signals: Affected by atmospheric phenomena (especially during solar events) and signal multipath issues (signal bouncing between mountains or high buildings).
- Spoofing: An adversary could generate false signals to mislead an authorized user with respect to positioning or timing information.

3 Intelligence, Surveillance and Reconnaissance (ISR)

ISR systems enable through imagery to obtain information about activities and resources of an adversary and to secure data concerning the geographic characteristics of a particular area of interest, including denied areas where little or no data can be obtained from other sources without putting at risk personnel and means.

Space-based sensors provide long-term wide or narrow area surveillance, at a range of resolutions (up to less than 1 metre) and spectra. Satellites in LEO (Low Earth Orbit) and MEO (Medium Earth Orbit) can provide coverage of targets within minutes, and GEO satellites can provide continuous surveillance because their orbits give them the persistent access to large portions of the Earth, even though with a worse resolution.

When using ISR capabilities, the following factors should be considered: what kind of information is required (*e.g.* what type of imagery, resolution and coverage) and how often the information is required (*i.e.* revisit time). Both factors are strongly interconnected with each other and will determine what type of product is received. For planning purposes, it is important to note that a product with a better resolution usually coincides with smaller coverage and an increased revisit time. Vice versa, a lower resolution usually is associated with a larger area of coverage and shorter revisit time. It is possible to increase the resolution by pointing the sensor towards the area of interest during the satellite's orbit, but this limits the coverage.

The most common ISR sensors are Electro-Optical (EO), Infrared (IR) and Synthetic Aperture Radar (SAR). EO sensors provide photography-like imagery by using the visible wavelengths, *i.e.* wavelengths that the human eye can capture. The main advantage of this type of product is the simplicity of reading the image, so the information needed can be extracted

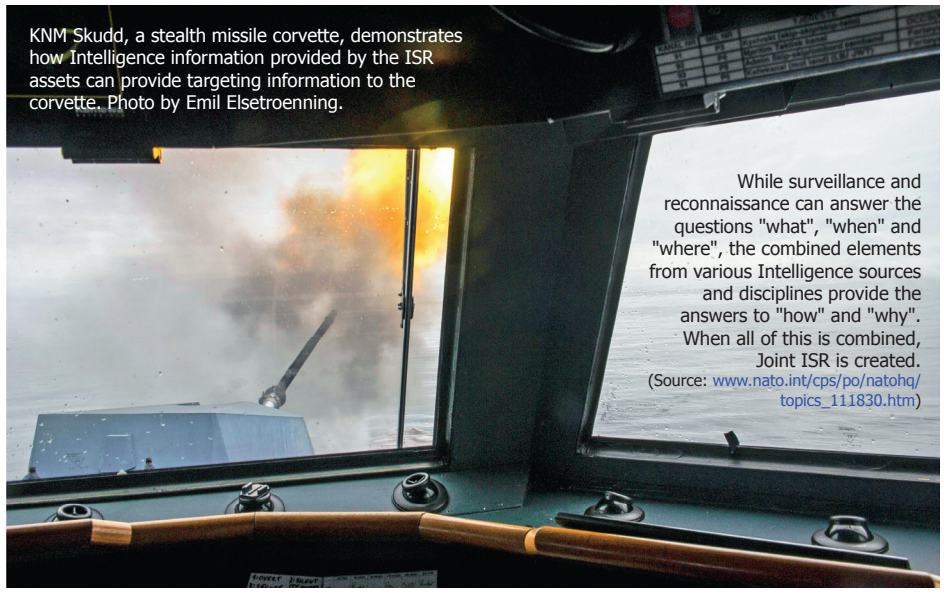

KNM Skudd, a stealth missile corvette, demonstrates how Intelligence information provided by the ISR assets can provide targeting information to the corvette. Photo by Emil Elsetroenning.

While surveillance and reconnaissance can answer the questions "what", "when" and "where", the combined elements from various Intelligence sources and disciplines provide the answers to "how" and "why". When all of this is combined, Joint ISR is created. (Source: www.nato.int/cps/po/natohq/topics_111830.htm)

immediately. IR/thermal sensors provide imagery by exploiting the temperature of bodies, which makes observations possible during low light conditions. One factor to consider is that EO and IR sensors are impacted by terrestrial weather conditions and can result in a poor image/product. SAR satellites offer a significant advantage over EO and IR satellites. Since they are not affected by weather conditions such as clouds and fog, they can penetrate vegetation (foliage penetration), and they are able to capture pictures also during hours of darkness. SAR data can be used to reveal things like camouflage, disturbed dirt or even tire tracks on grass fields and underground features, which optical satellites cannot distinguish. A factor to take into consideration is that SAR imagery necessitates significant processing time and analysts.

NATO Uses and Effects

- Operation preparation
- Battle Damage Assessment (BDA)
- Intelligence
- Targeting
- C-IED

Advantages

- Coverage: Global and wide-area coverage over denied areas where little or no data can be obtained from other sources. Due to various UN Space treaties, any Space asset can overfly any territory on Earth without authorization, which allows them to take images and gather Intelligence without authorizing border crossing authority, or risking any Earth-bound ISR assets (Maritime, Air and Land).
- ISR systems enhance planning capabilities by providing updated information regarding terrain and adversary force dispositions.
- 3D-imagery and feature measurement. Stereo imagery provides 3D-imagery and features identification and measurement.
- Feature characterization: Panchromatic, multispectral, and hyperspectral imagery are contributing sources of data for the development and update of Geo-Information Systems (GIS). This type of imagery provides information on terrain (*e.g.* soil composition and surface moisture conditions), oceanic conditions, vegetation, ice coverage, and even subsurface/underground conditions.

Disadvantages

- Orbits: Depending on their orbit, ISR satellites may suffer gaps in surveillance periods.
- Predictability: Overfly schedule dictated by the satellite orbit. By their nature, satellite revisit times are predictable. Therefore, a threat-aware adversary could adjust its activity to avoid intelligence gathering.
- Resolution: Depending on the type of sensor and orbit, different levels of resolution can be achieved. EO and radar-based sensors can reach sub-metric resolution, while IR sensors have lower resolution of approximately 20 metres.
- Spectrum constraints: EO sensors have a limit in operating during daylight and in good weather conditions. IR sensors also require good weather, but can operate in day or night. Radar sensors can collect in every light and weather conditions.
- Atmospheric disturbances: Fog, smoke, electrical storms, precipitation and clouds affect the ability of imaging systems.
- Priority conflicts: High demand—Low density (HD/LD) assets may lead to conflicts on the use of satellite ISR capabilities. During a crisis, geospatial information producers are in direct competition with Intelligence activities for national collection systems. In some cases, this competition could be mitigated by the use of civil and commercial imagery sources.
- Vulnerability: Anti-Satellite (ASAT) weapons and Space debris represent two sources of vulnerability for ISR satellites.

Meteorology and Oceanography (METOC)

Environmental monitoring satellites are typically placed in either sun-synchronous or GEO orbits, and provide terrestrial environmental monitoring, which include both atmospheric and oceanographic assessments. Understanding METOC-derived information is crucial for operational planning due to the impact it can have on a Space system's ability to complete its mission.

METOC is also in charge of the Space weather forecast service. Space weather consists of various phenomena which affect the near-Earth environment, the satellites themselves and their capability to operate effectively. Examples of phenomena referred to as "Space weather" include charged particles from sun activity like cosmic rays and the Van Allen radiation belts. Space weather can cause a shutdown or loss of services that could seriously affect communications, navigation accuracy and sensor performance.

NATO Uses and Effects

- Mission planning
- Munition selection
- Terrestrial (atmospheric and oceanographic) and Space weather forecasting
- Humanitarian assistance

Advantages

- Coverage: Environmental satellites gather data in remote or hostile areas, where little or no data can be obtained via, for example, terrestrial-based means.
- Manifold data: Environmental satellites typically gather data in three main spectral bands: the visual band (coverage and extent of clouds, ice fields, snow, etc), the infrared band (thermal characteristics of atmospheric features), and the microwave bands (sea surface winds, ground moisture, ice char-

	EO	IR	SAR
Resolution	High (<1 metre)	Low (20 metres)	High (<1 metre)
Operational Time	During daylight	All day	All day
Weather Conditions	Only clear sky	Only clear sky	All weather
Image Processing	Easy	Easy	Requires time and expertise

ABOVE: Main characteristics of EO, IR, and SAR sensors. For more information see page 67.

Turkish-led maritime exercise, MAVI BALINA, involving NATO and regional forces in the Eastern Mediterranean to improve interoperability and proficiency in anti-submarine warfare scenarios. Photo by CPO Christian Valverde, HQ MARCOM (Source: U.S. Naval Forces Europe-Africa Website at http://www.c6f.navy.mil/news)

acteristics, atmospheric temperatures, and water vapour profiles).

Disadvantages

- Resolution: The biggest limitation of METOC capability is represented by the need for a compromise between resolution and time over target. Polar-orbiting satellites have periodic revisit rates over the target area, and therefore have a limited time over target for observations. However, these satellites provide global coverage and high-resolution data at all latitudes. On the contrary, geosynchronous satellites provide lower resolution images, but they maintain a constant view of their coverage area. Coverage at polar latitudes is poor.

5 Space Situational Awareness (SSA)

Space capabilities have become essential to many operations, and this dependency will only increase in the future. Monitoring of Space provides the ability to detect and mitigate the impacts that Space objects have on satellites and their services. SSA includes information from both ground-based sensors (*e.g.* radars and telescopes) and Space-based sensors (*i.e.* sensor payloads on board of satellites). SSA capability gives satellite controllers time to employ effective countermeasures against potential hazardous events in order to assure the operational capability and protection of the Space system.

Much of the existing debris and micrometeorites in Space are too small to track using current sensor capabilities. About 30,000 man-made objects in Earth orbit are estimated to be large enough (10 centimetres or larger) to cause a total destruction of a Space asset in a collision. As orbits around the Earth become increasingly congested, a future collision may generate a runaway chain of events that creates collision after collision, rendering some orbits unusable for centuries. For this reason, it is vital for NATO to monitor the Space environment.

NATO Uses and Effects

- Space assets defence, including notification of potential collisions with Space debris.
- Surveillance of Space.
- Prevention of an adversary's ability to use Space systems and services for purposes hostile to a Nation's security interests.

6 Shared Early Warning (SEW)

USA is the only NATO Nation at present with dedicated Space-based assets for missile warning. NATO and USA have an established SEW policy, which assures that USA will provide Integrated Threat Warning and Attack Assessment (ITWAA) for all European NATO populations, territories and forces.

NATO Uses and Effects

- Force protection
- Early missile warning detection

Threats and Vulnerabilities

Space capabilities are vulnerable to both natural phenomena and man-made threats. Almost all natural hazards within the Space segment come from the sun. Various specific effects associated with solar activity are listed below:

- Individual charged particles can penetrate and damage electronic circuits, or reduce the reliability of electronic components.

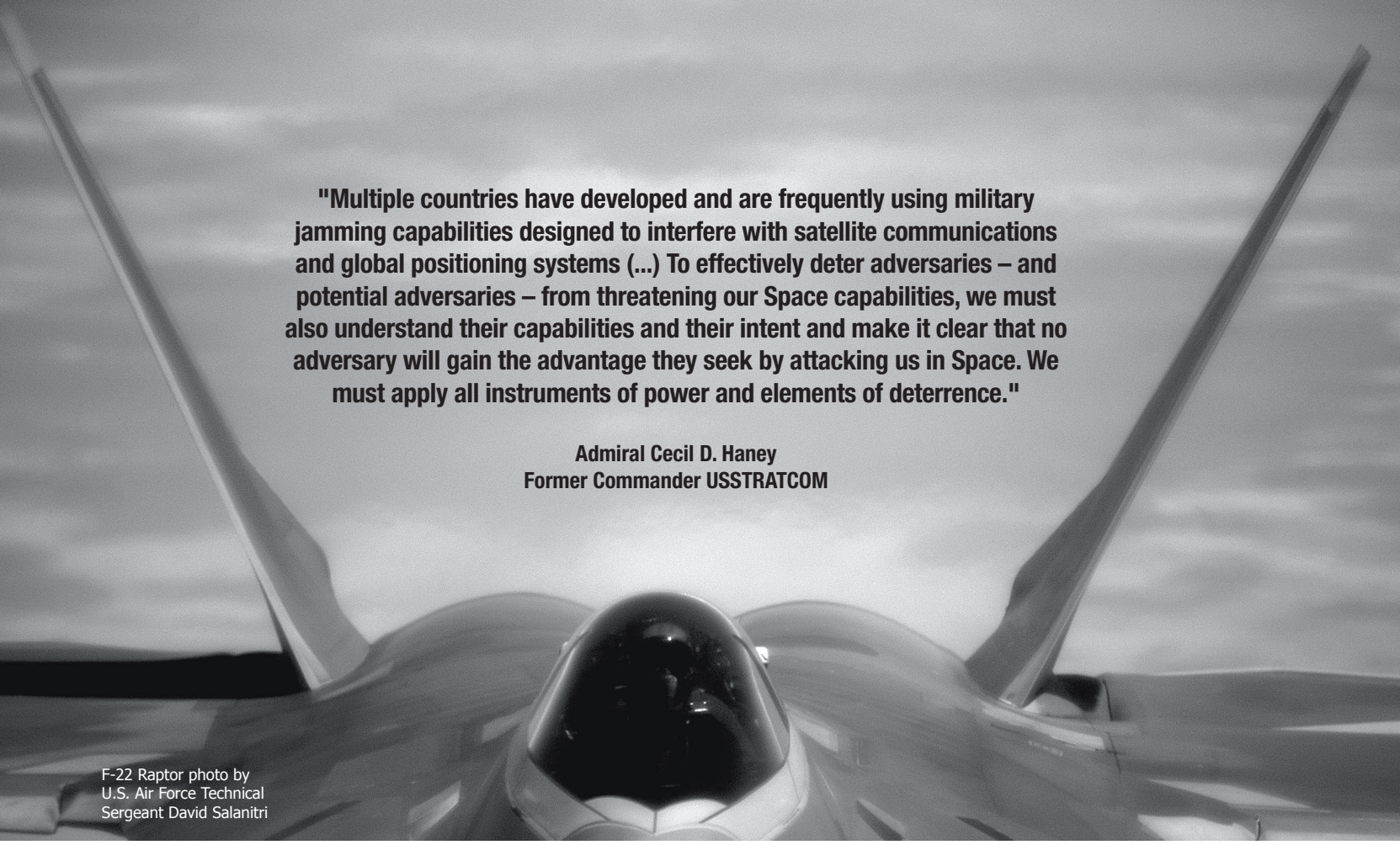

"Multiple countries have developed and are frequently using military jamming capabilities designed to interfere with satellite communications and global positioning systems (...) To effectively deter adversaries – and potential adversaries – from threatening our Space capabilities, we must also understand their capabilities and their intent and make it clear that no adversary will gain the advantage they seek by attacking us in Space. We must apply all instruments of power and elements of deterrence."

Admiral Cecil D. Haney
Former Commander USSTRATCOM

F-22 Raptor photo by U.S. Air Force Technical Sergeant David Salanitri

- Increased electromagnetic noise and ionospheric interference.
- The continuous impact of solar particles on the satellite's outer surface can cause physical damage.
- Increased solar activity warms the outer layers of the atmosphere, causing it to expand outwards from the Earth. This can affect orbits by increasing drag.

Space debris is the main man-made hazard, however, this is not the only threat for satellites. Orbits around Earth have become increasingly cluttered with debris. Space systems provide a tremendous advantage to NATO and Nations and therefore are a high priority target for our adversaries. Allies must protect their national assets by anticipating adversary attempts to degrade, disrupt or deny friendly force access to Space capabilities (*i.e.* Defensive Counter-Space), while doing the same against the enemies (*i.e.* Offensive Counter-Space). Defensive Counter-Space (DCS) includes every action taken in order to deny adversary capacity the possibility attacking Space assets and capabilities, and it is mainly an Earth-to-Earth activity. DCS aims to protect and preserve friendly Space capabilities, withstand or supress enemy attacks, and restore/recover from it. Offensive Counter-Space (OCS) aims to deny, degrade, destroy or deceive an adversary's Space capability or the Space support provided by a third party. It can be reversible or non-reversible, kinetic or non-kinetic, and is mostly an Earth-to-Earth activity. OCS capability includes:

- **Jamming:** An electronic signal consisting of the intentional emission of radio frequency signals to interfere with wireless communications, thus leading to disruption or denial of service.
- **Spoofing:** It is the process of identity falsification, put in place in order to gain illegitimate advantage on the use of the adversary's devices and information.
- **Anti-satellite (ASAT) Weapons:** Weapons designed to incapacitate or destroy satellites for strategic military purposes. They can be subdivided into Kinetic-Energy Weapons (KEW) or Directed-Energy Weapons (DEW). Both types of ASAT weapons can be ground-, air- or Space-based.[9] KEWs are usually designed to incapacitate or destroy the satellite while DEWs are designed to permanently damage or disrupt the satellite's communications or sensors. DEWs have the advantages of being discreet (*i.e.* less traceable), as radiation above and below the visible spectrum is invisible and does not generate sound. These include:

—**Ground-based kinetic energy attacks (also referred to as direct-ascent):** Ballistic missiles can carry a warhead above the atmosphere into LEO and release it in the direction of the target satellite. Satellites in LEO are well within range of ballistic missiles. Access to the MEO and GEO.
—**Space-based kinetic energy attacks:** These types of ASATs could be used in all orbits up to GEO and are deployed in space well before they are intended to be used. They are capable of delivering the same effects as ground-based kinetic energy attacks, but with much greater kinetic energy.
—**High-altitude nuclear explosion:** The intense electromagnetic pulse (EMP) resulting from a nuclear explosion would likely destroy all unshielded satellites in LEO that are in line of sight.
—**Laser attacks:** High-power lasers attacks can upset the delicate thermal balance of satellites in LEO long enough to damage the satellite's components.

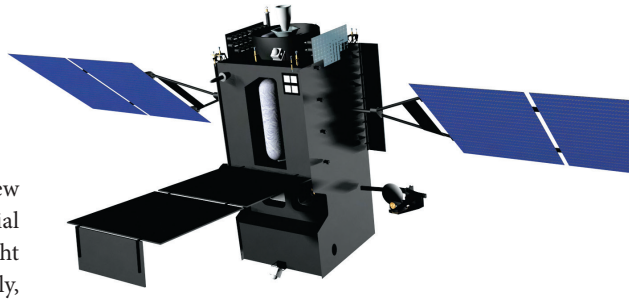

Space Based Infrared Systems

- **Cyber-attacks:** Space systems present a possible triple opportunity for hackers; the hardware and software embedded in a satellite (by using bugs and malwares), the information that the satellite transmits, and the network of ground stations it relies upon. Not only satellite data and services make attractive targets for cyber-attacks, but there is also the potential risk that hackers could take physical control of satellites via remotely configurable computers or through a network intrusion of ground stations. Cyber-attacks could even lead to the destruction of a satellite. (An example of how a cyber-attack could do this is by adjusting solar panels to overcharge the energy system or by moving the satellite into the path of another satellite).

Finally, the intense competition to launch new satellite networks may also push commercial actors to develop cheaper solutions that might be less secure and less protected. Importantly, this may also affect the military domain, which increasingly relies on commercial satellites.

END NOTES:

1 Statement of Lieutenant John W. Raymond before the U.S. House Armed Services Subcommittee on Strategic Forces, 25 March 2015.

2 MCM 0108-2012 (NATO's approach to Space) and IMSM 0322-2016–(NATO's approach to Space–Follow on Work).

3 The result of processed and analysed data originated by Space-based sensors. Space products include but are not limited to Space imagery, and weather maps.

4 Space services are represented by a continuous stream of data, provided directly from Space to an end user terminal. Satellite communications and PNT (Positioning, Navigation and Timing) are examples of Space services.

5 Geostationary Earth Orbit (GEO): an orbit that matches Earth's sidereal rotation period (approximately 24 hours), placed exactly above the equator, at an altitude of 35,786 km. Satellites in GEO orbit move at the same pace as the Earth rotates. This means that their sensors remain stationary, focused on the same area of the Earth 24/7.

6 Low Earth Orbit (LEO): an orbit situated between 100 km and 2,000 km of altitude.

7 Highly Elliptical Orbit (HEO): a highly elliptical orbit used to provide 9-10 hours of continuous coverage to high latitudes regions.

8 Medium Earth Orbit (MEO): an orbit between 5,000 km and 24,000 km of altitude (PNT satellites are placed at 20,500 km).

9 From a legal point of view, the Outer Space Treaty (1967) is widely accepted as one of the primary sources of international Space law. As commonly interpreted, it does not forbid the use of Space capabilities for military purposes. The treaty prohibits the placing of any weapons of mass destruction, including nuclear warheads, in orbit around the Earth, but it does not prohibit the stationing of conventional weapons in orbit.

Personnel from SHAPE Cyber Division Defence Operation Department scrutinize a live time cyber threat worldmap website during Exercise CYBER COALITION 2016, Photo by Edouard Bocquet, NATO

Capability	Partial or Complete Loss
SATCOM	• C3 info delayed, slower • No BLOS C2. Terrestrial land line communication only (if available)—reliant on radios, telephone, telegraph, much slower internet • RPAs radio controlled
PNT	• Precise location and ID of forces (no friendly force tracking) • No GPS-aided weapons: less accuracy. Rely on inertial guided radar, laser, personnel for targeting/fires • Must use maps • Personnel recovery goes from minutes/hours to days • C3 much slower and affecting decision/engagement space, actions, etc.
ISR	• Complete reliance on Air, HUMINT/ELINT/SIGINT, and Special Operations Forces • Lose overhead, persistent pre-crisis and crisis indications and warning
METOC	• Use of legacy weather prediction tools • Constant map surveying required due to global environmental changes
ITWAA	• Initial early warning of ballistic missile launch. Lose critical decision space. Approximately first-second minute of ~15 minutes intercept window • Forces and civilians more at risk to attack, damage and destruction

ABOVE: Impacts on operations due to partial or complete loss of Space capabilities.